Digital Array Microphone Quick Start Guide

1 Packing List

Item	Quantity
Digital Array Microphone	1
USB Cable	1
3.5mm Audio Cable	1
Quick Start Guide	1

2 Appearance and Interface

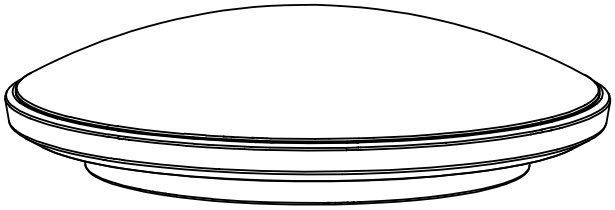

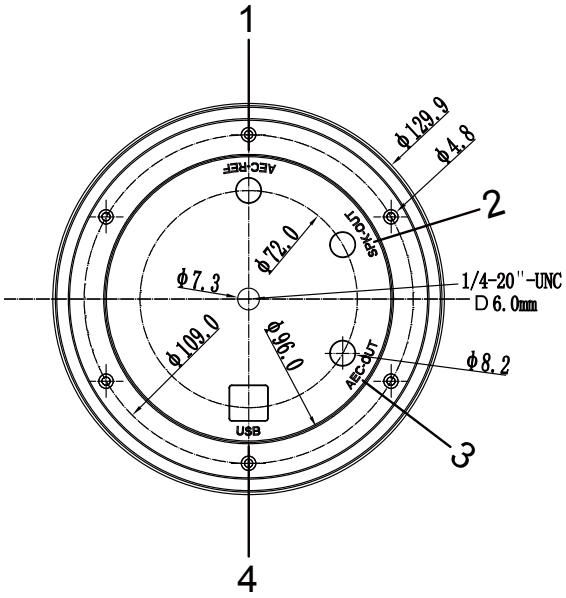

No.	Name	Function
1	AEC-REF	Signal input interface, input remote audio signal.
2	SPK-OUT	Audio signal output interface, output to the speaker.
3	AEC-OUT	Signal output interface, output to remote equipment.
4	USB	USB interface is used to connect host and charge the microphone.

3 Product Feature

Digital Array Microphone, Long Distance Voice Pickup

Digital array microphone, 8-meter distance voice pickup. A hands-free lecture and presentation solution.

Intelligent Voice Tracking

Adaptive blind beamforming technology provides adaptability to different sound environments. With speech reinforcement, the microphone minimizes interference and keeps speech clear.

Multiple Audio Algorithms, High Quality of Sound

Using proprietary technologies including intelligent noise reduction, echo cancellation and reverberation suppression to ensure clear sound quality and comfortable communication. Less requirements of the classroom decoration. Supports full duplex communication.

Simply Installation, Plug and Play

Using standard USB2.0 and 3.5 mm audio interface, zero configuration design, plug and play. Simple system and compact appearance, easy to install and maintain. Supports dual-mode (digital, analog) output.

Available in Two Colors, Blends into Different Environments

It adopts the technology of hot laminating and wrapping cloth. With natural visual effect, white design adapts to white walls of classrooms, and black design blends into modern conference rooms.

4 Product Specification

Audio Parameters	
Microphone Type	Digital Array Microphone
Array Microphone	Built-in 7 mics to form a circular array microphone
Sensitivity	-26 dBFS
Signal Noise to Ratio	64 dB(A)
Frequency Response	20Hz - 16kHz
Pickup Range	8m
USB Protocol	Support UAC
Automatic Echo Cancellation (AEC)	Support
Automatic Noise Suppression (ANS)	Support
Automatic Gain Control (AGC)	Support
Hardware Interface	
Audio Input	1 x 3.5mm line in
Audio Output	2 x 3.5mm line out
USB Interface	1 x USB audio interface
General Specification	
Power Input	USB 5V
Dimensions	Φ 130mm x H 33mm

5 Product Installation

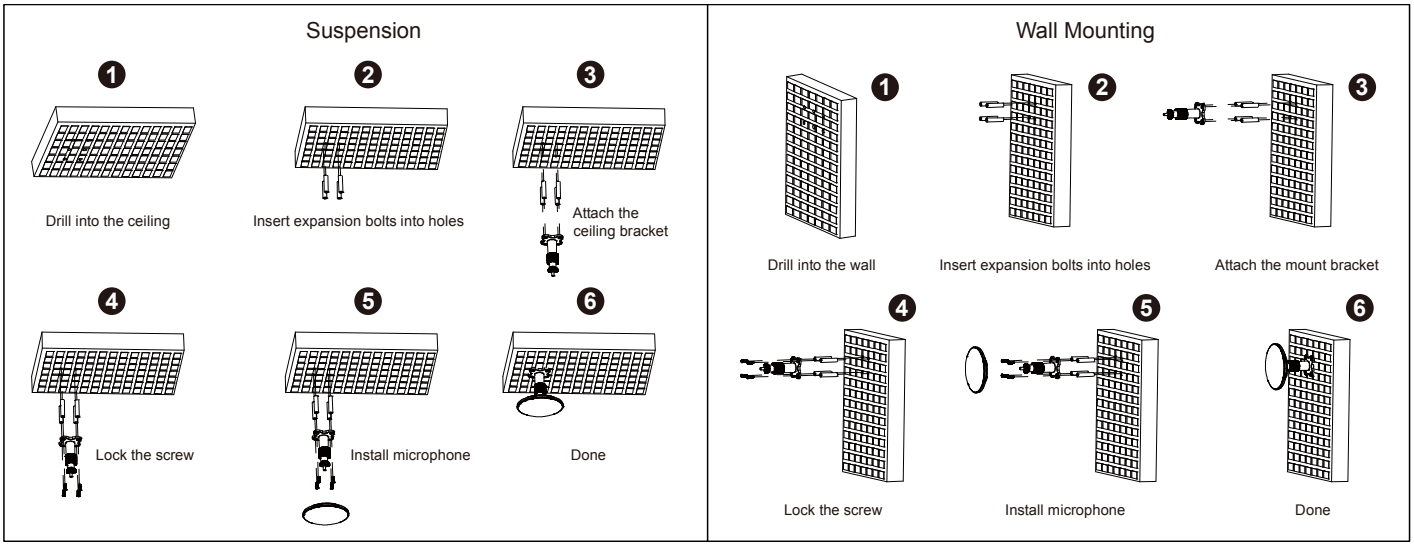

6 Network Application

6.1 Analog Connection (3.5mm Interface)

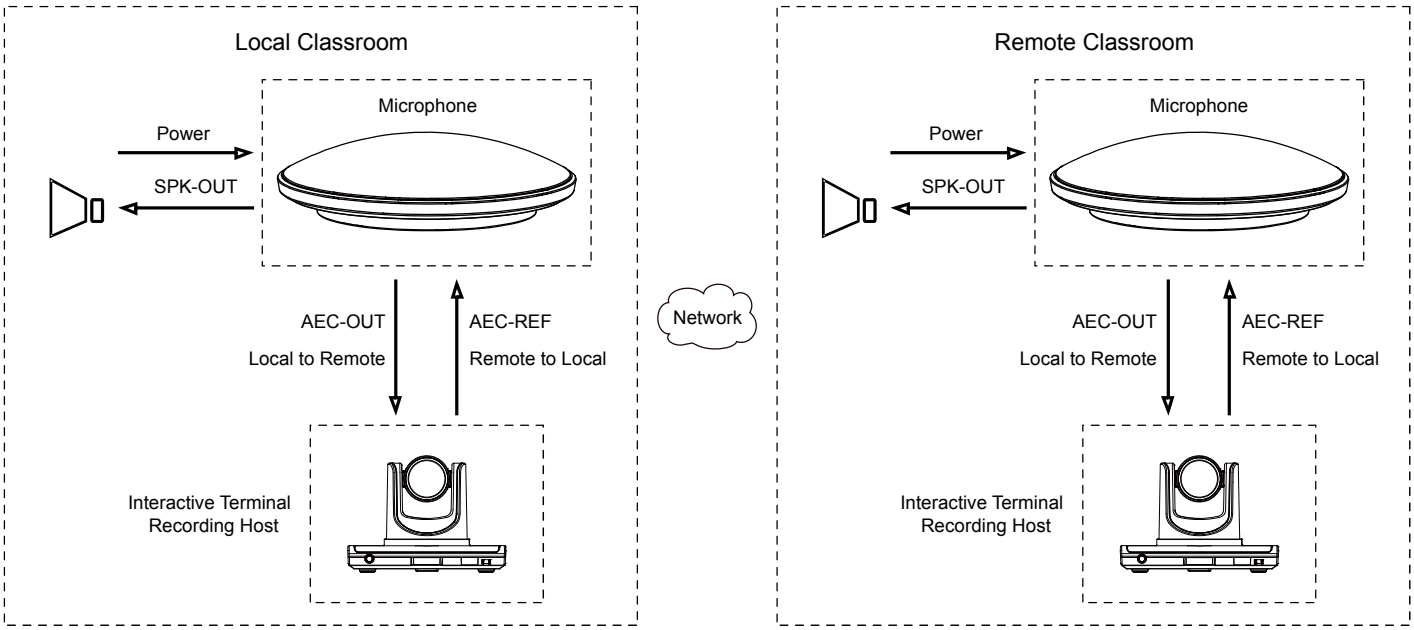
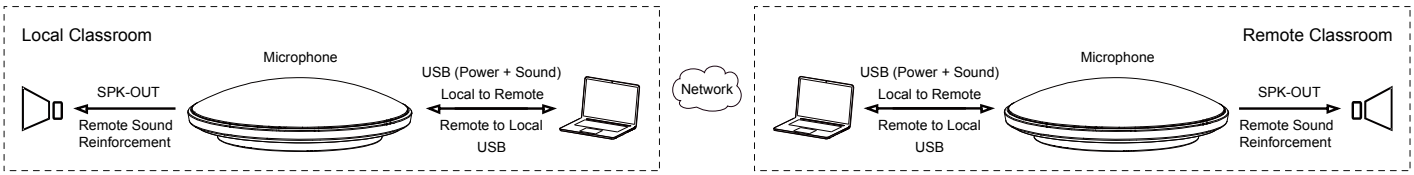
6.2 Digital Connection (USB Interface)